DOMINATOR SUSPENSION BY CAMBURG

Ford Ranger 2wd/4wd

[excludes Raptor models]

2024–2025

Installation Instructions

P/N: CAM-110277

Thanks for purchasing the Dominator Preload System for your vehicle. Please follow all instructions. These are designed for the OEM shocks and coil springs. These are NOT designed to be used with aftermarket coil springs or spacers/shims. Make sure to check the parts list to make sure you have every component prior to starting. Camburg Engineering has made every attempt to insure you receive the highest quality components in the most complete manner. This is a guide to help you through the process with recommended torque specs. It's your responsibility to ensure parts are being installed correctly using the correct tools and procedures. We recommend reviewing a service manual for more details.

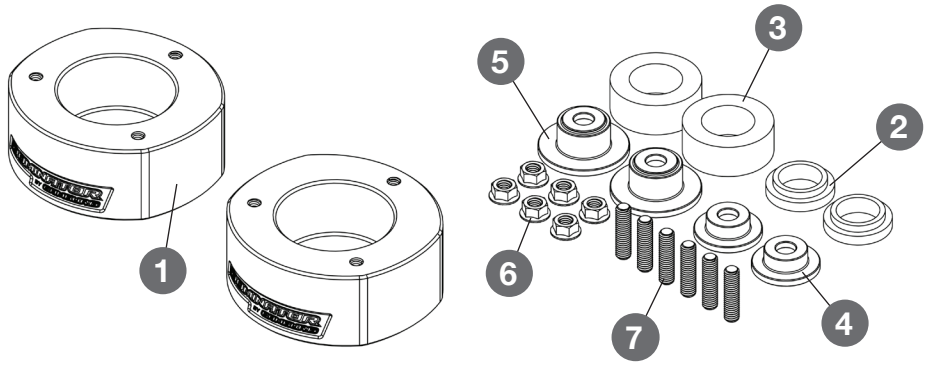

1. **Dominator Upper Shock/Coil Mounts**
2. **Isolator Lower Stepped Bushings**
3. **Isolator Upper Bushings**
4. **Isolator Lower Washers** (Smaller OD)
5. **Isolator Upper Washers** (Larger OD)
6. **Flanged Hex Nuts** (3/8-16)
7. **Threaded Studs** (3/8-16 x 1.5")

Safety Glasses

Basic Hand Tools

Ratchet & Sockets

Jack or Auto Lift
(Don't forget jack stands!)

Pry Bar or Crowbar

Spring Compressor

PROFESSIONAL INSTALLATION IS STRONGLY RECOMMENDED

WARNING: When working on, under, or around any vehicle always exercise caution. Take care when lifting your vehicle off the ground, and when doing so without a multi-post lift, consult vehicle manual for correct lifting procedures. Always wear safety glasses and ensure a safe working area. Serious injury or death could occur if safety measures are not followed.

ATTENTION: Always take great care removing loaded springs from shock assemblies. Springs are under tremendous loads and can abruptly and dangerously decompress unless properly disassembled.

WARRANTY INFO
Scan QR Code *or* Click Here

Installation Instructions

Ford Ranger 2wd/4wd

2024–2025

P/N: CAM-110277

Step 1

Begin by lifting your vehicle's front end off the ground, and removing the front wheels to access the suspension. If you are not using a post lift in a shop environment, park on a safe, solid, and level surface from which to lift from. Use an appropriate jack to lift, and use jack stands to support the vehicle while the suspension and wheels are removed.

Step 2

With your vehicle safely in the air, and your front wheels removed, you're ready to disassemble the front suspension to remove your strut assembly.

The next steps are recommended to make removal and re-installation easy as possible. Skipping these steps can make installation substantially more difficult, and can increase the risk of damaging suspension components throughout the process.

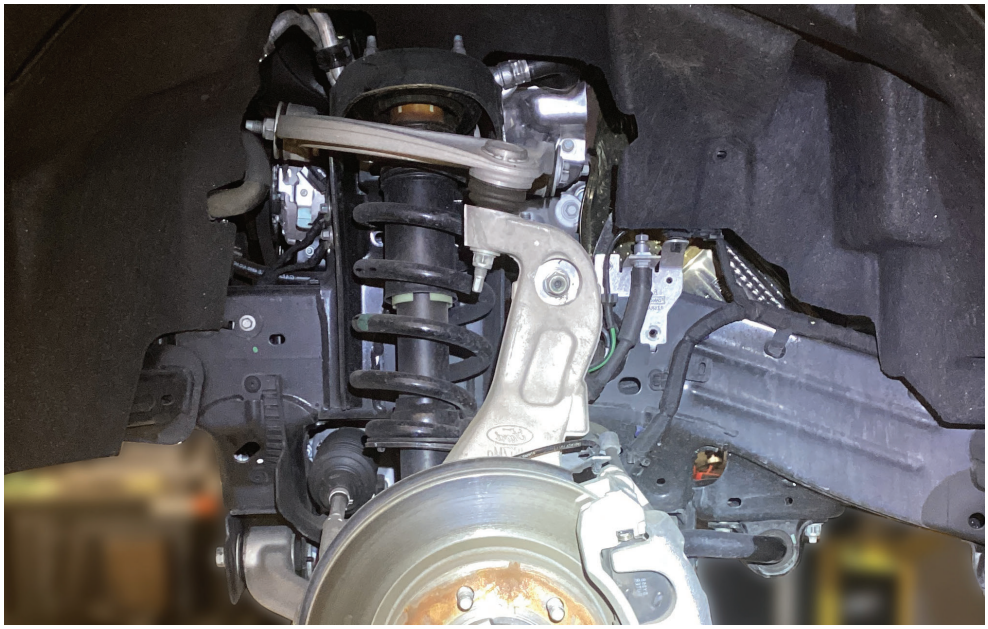

Step 3

Starting with the driver side, begin by removing the hardware that holds your brake line and abs sensor to the spindle/knuckle and frame if need be. Take care throughout the install process to make sure brake lines remain free of tension and clear of pinch points. Removing skid plates and the inner fender liner offers more room to work if need be.

Step 4

Support your lower control arm with a jack, or a screw stand if using a lift. This will allow you to easily articulate the front suspension as you work, as well as provide an extra layer of safety.

Step 5

Next remove the sway bar end links from the spindles/knuckles to relieve sway bar tension. Support the spindle/knuckle/hub assembly with a strap or jack. On 4wd models we recommend loosening the outer axle nut and pushing the axle in slightly as not to over extend. Mark the nut for reference and loosen. Then remove the nut from your upper ball joint. Carefully remove the ball joint from the spindle/knuckle following proper procedure (using a ball joint separator or otherwise).

Step 6

Remove the the factory coil/shock assembly by removing the mounting hardware in the lower control arm and the three nuts that secure the assembly to the chassis. Do not remove the center shock shaft nut. You may need to remove the outer tie rod from the spindle/knuckle to ease removal. Take note top and bottom of the shock and spring for position/rotation with a marker.

Step 7

WARNING: Springs are under tremendous pressure and can be very dangerous when disassembling. If you are unfamiliar with the process of taking a strut apart, leave this work to a professional shop.

Using a spring compressor (ensuring it is rated for truck strength springs), carefully compress the spring and unload the top hat to where you can clearly see the spring is no longer in contact with the top hat assembly.

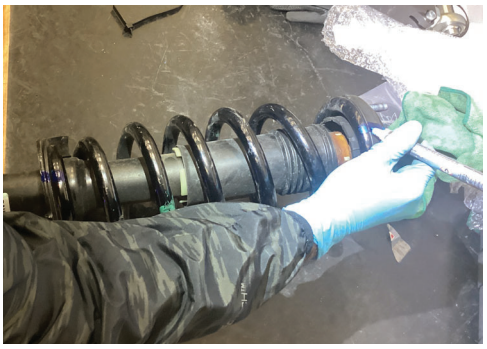

Step 8

While supporting the shock, using a wrench or pliers, grip the flats on the strut shaft (center of top hat) and remove the center nut. Once off, you may carefully remove the OEM top hat assembly and bushings. Remove the OEM spring isolator bushing from the OEM mount as it will be reused.

Step 9

Begin assembling your Dominator upper mount. Apply red loctite to one end of the supplied 3/8" studs and thread that end into the mount until it bottoms out. We recommend using a stud installation tool or you can double nut the stud and use a wrench. Once all studs are installed, let the loctite set for 15 minutes. Next you'll install the supplied isolaters bushings and washers into the mount.

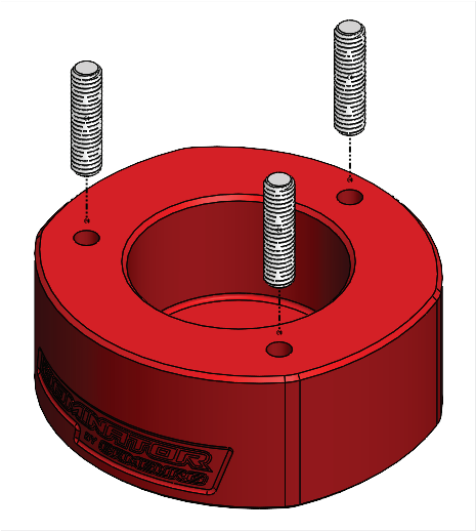

Step 10

Insert the lower isolater bushing into the bottom side of the Dominator mount followed by the lower bushing washer. Then slip the upper isolater bushing onto the upper bushing washer and install into the top side of the Dominator mount. Make sure all parts are fully seated. See diagrams and pictures for reference.

Remove the OEM upper coil spring rubber isolater from the original mount and transfer to the Dominator mount with the outward reference mark made earlier on the same side as the Dominator logo

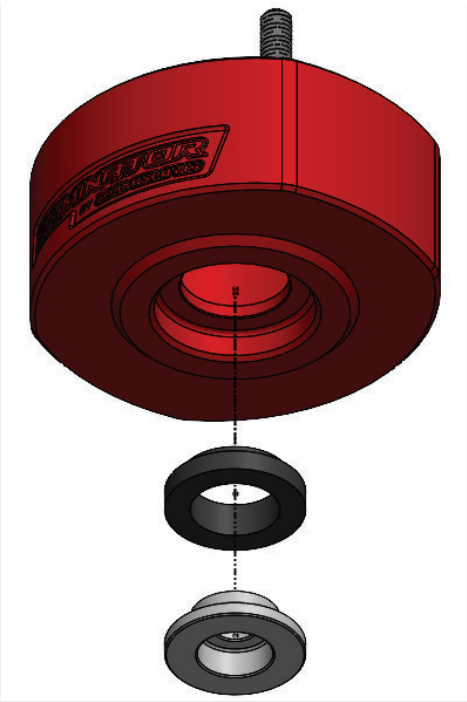

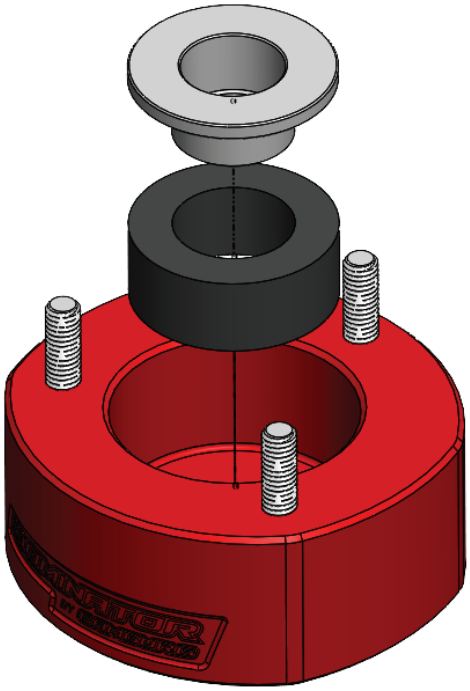

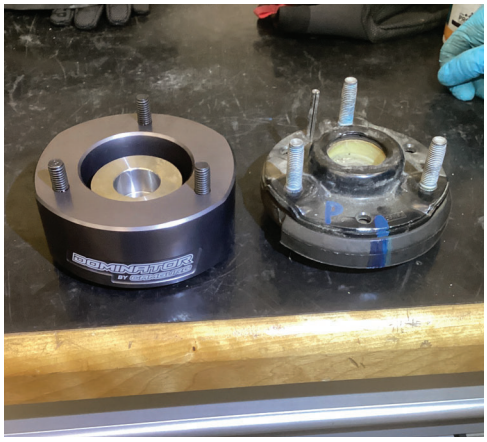

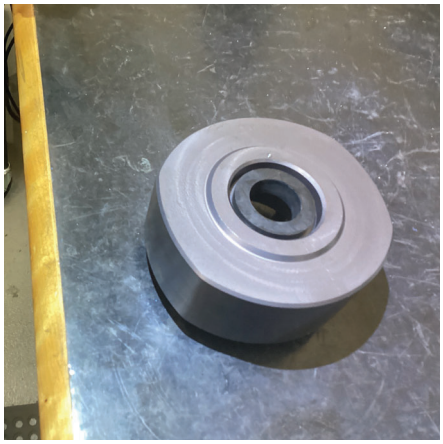

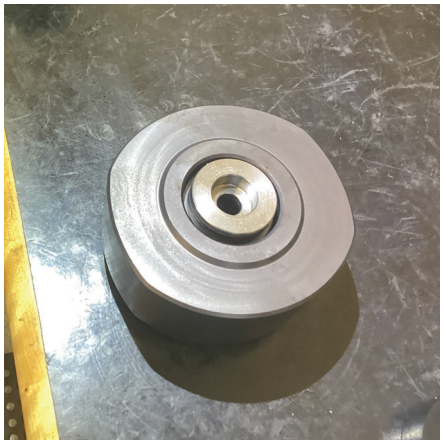

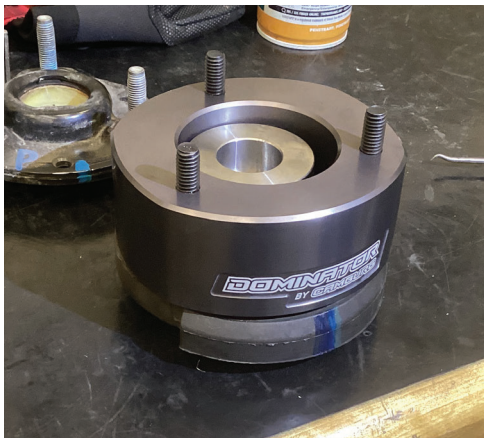

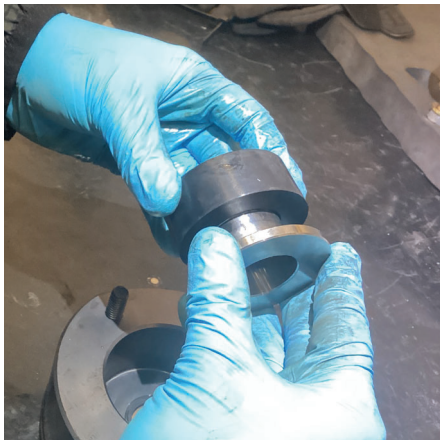

Step 11

Install the upper assembly onto the coil spring with the alignment marks inline with one another. Then from the bottom install the shock up into the spring with the shock shaft through the Dominator assembly.

Using the original OEM shock shaft nut, torque to OEM specifications using a wrench or pliers to grip the flats on the shock shaft if need be.

Slowly uncompress the coil spring making sure all the alignment marks on the shock body, lower coil spring seat and upper spring isolater are inline with the Dominator logo. The lower t-bar should be parallel with the Dominator logo.

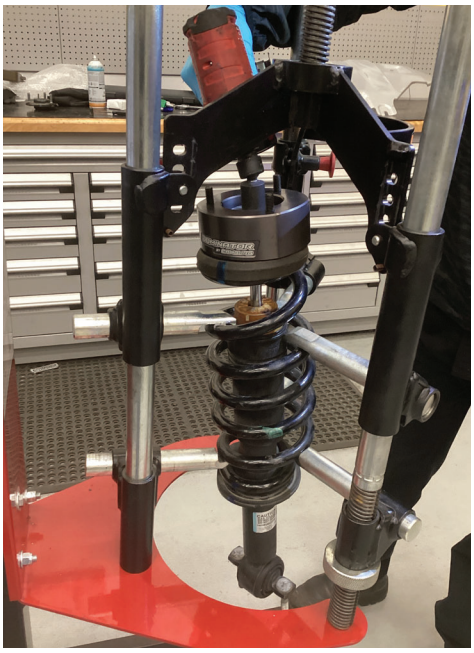

Step 12

Carefully remove the coil/shock assembly from the spring compressor and re-install on the vehicle in the reverse order.

With the Dominator logo facing outward, torque the supplied 3/8 nuts to 25 ft/lbs. with blue loctite.

Make sure to properly install all OEM hardware and components and torque to OEM specifications. When reinstalling the brake line and abs sensor mounting hardware, insure no additional stress is on the lines, and that no hoses or lines will be in a pinch zone when the vehicle is lowered back to the ground. Make sure to tighten and torque the outer axle nut.

Repeat steps 3 through 12 for the passenger side.

Check that all hardware is tightened and torqued down before proceeding. You can now reinstall your wheels, and lower your truck back down onto the ground. As always, take care when dealing with a vehicle supported off the ground.

With your vehicle back on the ground, take a close look at both the upper and lower ends of the spring to ensure it is still seated properly on the lower end of the strut and on the Dominator mount at the top.

Pre-flight Checks ✓

Ford Ranger 2wd/4wd
2024–2025

P/N: CAM-110277

- ❑ With the car back on the ground and off of your lift or jack stands, take a few moments to 'cycle' both sides of the front suspension by rocking the truck side to side, listening for any irregular sounds (creaking, clunking, metallic scraping, etc.).
- ❑ Once your vehicle is reassembled and on the ground, give your front suspension a thorough inspection, ensuring the spring is seated correctly, and that no cables, hoses, or other components have been pinched or are out of their proper place.
- ❑ Before you hit the road or trail, make sure you have checked and torqued all fasteners involved in installing your Dominator Preload System, including your lug nuts.

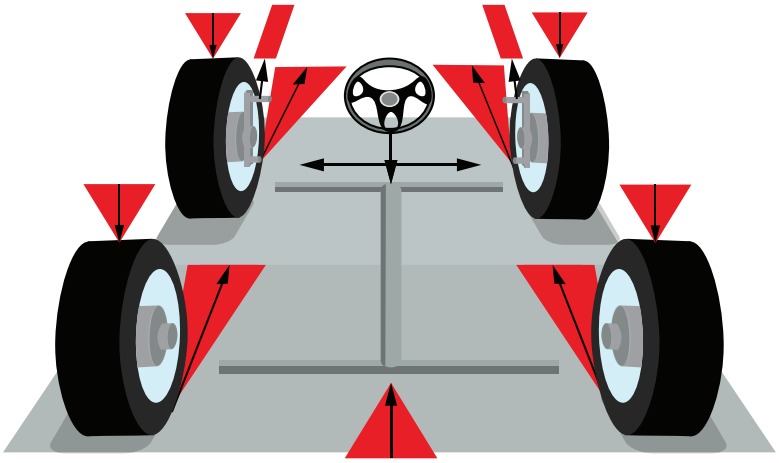

WARNING: After completing installation of your Dominator Preload System your vehicle will need to be professionally aligned. Changing ride height alters suspension geometry, and while every kit is designed to suit your vehicle, you still need a fresh alignment to maintain ideal drivability and minimize undue tire and component wear.

Looking to compliment your new lift with some Camburg control arms? Maybe you need fresh ball joints, or want some lighting or other accessories for your vehicle?

Scan or click the QR to find more parts for your rig.

Always inspect your suspension after off-roading and at your routine service intervals. Use of products sold by Camburg Engineering is at the consumer's own risk. Proper installation and proper use of all products must be followed for optimal safety and performance. Installing most suspension products will raise the center of gravity of the vehicle and can increase the susceptibility to a rollover and alter the handling characteristics. Camburg Engineering products may void aspects of the vehicles warranty. Camburg Engineering reserves the right to change the design, material or specifications of any product without assuming any obligation to modify any product previously manufactured and without prior notice. Every effort has been made to avoid printing errors and specifications. By purchasing, installing and/or using these products you are accepting these stated conditions and accept all liability and responsibility.